Page Number	01/02
Total Pages	01/02
Page Status	Production
Page Type	Production
Page Name	8951000458_DIM
Sheet Name	8951000458_DIM

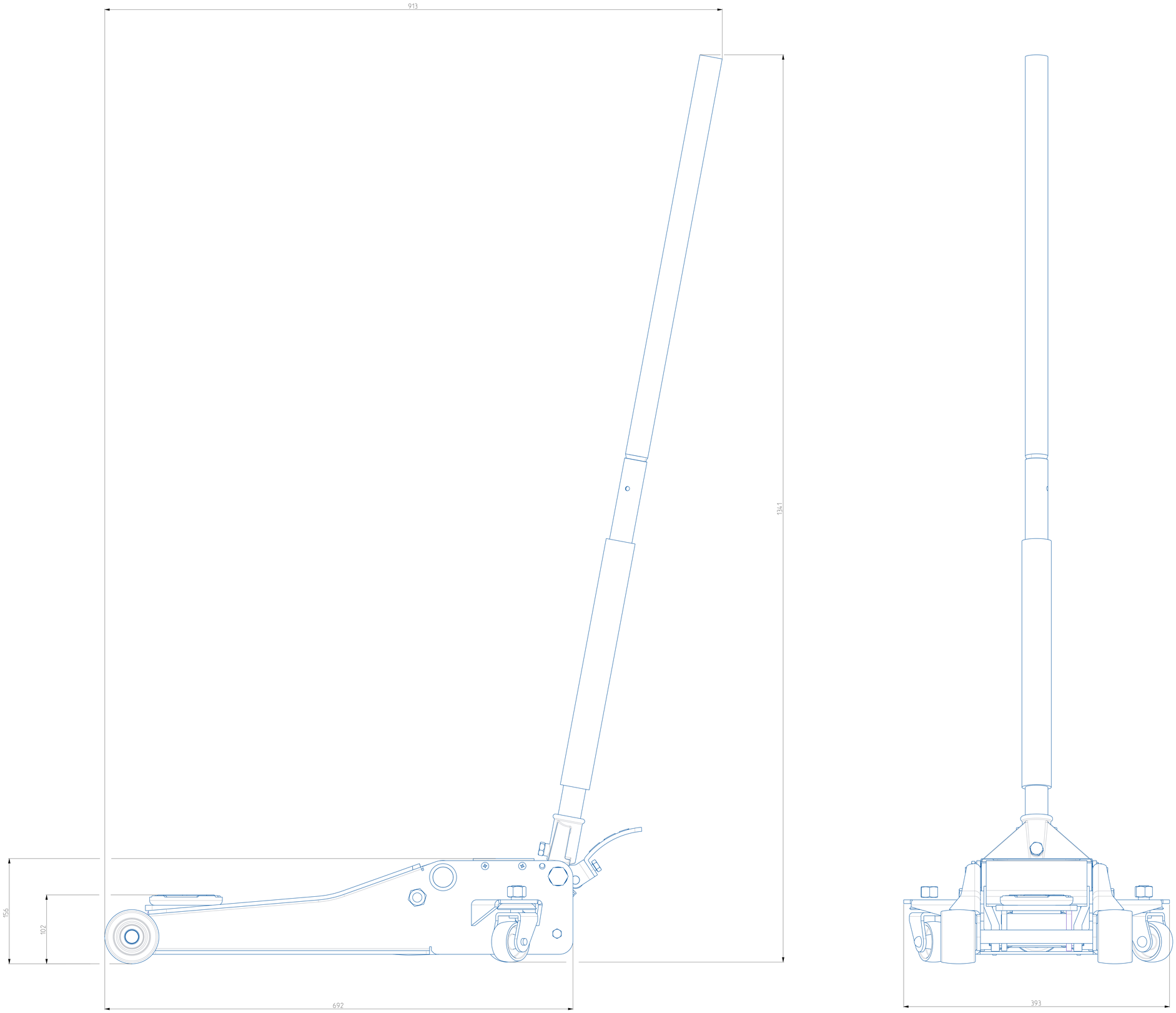

REV.N°	ECN.N°	POS.	MODIFICATION DETAILS	DATE YYYY/MM/DD	INIT.
01	-	-	Release for Production	2023/02/06	ALG

This document is our property and shall not be copied or used for any purpose not agreed in writing, nor shall its contents be disclosed to any other person or company.
Il presente documento è di nostra proprietà e non può essere copiato o usato per scopi non concordati per iscritto, né il suo contenuto deve essere rivelato a terzi.

Build of the Material Directly from the drawing
Bill of Material 2023-02-06 12:17:12 pm

DESCRIPTION

TROLLEY JACK RH316

DATE YYYY/MM/DD	2023/02/06
	1 / 1
DRG.SIZE	A0
MODEL NAME	8951000458_DIM
WEIGHT	0.000 Kg
RELEASE LEVEL	Production
SCALE	0.5
BLANK DRG.	–
PROTO DRG.	–
DRG.No	8951000458_DIM
Rev.	01
DRAWN BY	ALG